ULTRA QUIET & OIL FREE

AIR COMPRESSOR

OWNER'S MANUAL

CALIFORNIA AIR TOOLS

10020C

2.0 HP

6.40 CFM @ 40 PSI

5.30 CFM @ 90 PSI

10.0 GALLON STEEL TANK

TABLE OF CONTENTS

INTRODUCTION 2

IMPORTANT SAFETY INSTRUCTIONS 3

LOCATIONS OF IMPORTANT LABELS 6

AIR COMPRESSOR COMPONENTS 7

PRE-OPERATION CHECKLIST 8

- Package Contents & Assembly 8
- Inspect for Damage 9
- Save Packaging 9
- Compressor Location 9
- Electrical Power 10

OPERATING THE AIR COMPRESSOR 10

- Introduction 10
- Assembly 10
- Test Run 11
- Daily Operation 11

MAINTENANCE 12

- Draining the Air Tank 12
- Changing the Air Filter 12
- Testing for Leaks 12
- Pressure Switch 12
- Cleaning 12

STORAGE 12

TROUBLESHOOTING 13

SPECIFICATIONS 14

- Electrical Circuit 14
- Air Passage Drawing 14

WARRANTY 15

PRODUCT REGISTRATION 17

INTRODUCTION

⚠ WARNING

This manual contains important instructions for operating this product. For your safety, and the safety of others, be sure to read this manual thoroughly before operating the product.

Failure to properly follow all the instructions and precautions can cause you and others to be seriously hurt or killed.

Thank you for purchasing a California Air Tools, Inc. Air Compressor.

Please contact us if you have any questions.

Record the model and serial numbers indicated on your air compressor's nameplate:

Model No. _____

Serial No. _____

Date of Purchase: _____

Store/Dealer: _____

How to find a local service center:

Even quality built equipment might need service or repair parts. Contact the California Air Tools Customer Service Department:

Phone: 1-866-409-4581

Online: WWW.CALIFORNIAAIRTOOLS.COM

Please provide the information below:

Model number and Serial number and specifications shown on the Model number/Serial number plate.

Part number or numbers shown in the parts list section of the owner's manual for your air compressor model.

A brief description of the trouble with the air compressor.

Do not return your air compressor for service or parts to the store/dealer where purchased.

IMPORTANT SAFETY INSTRUCTIONS

Safety Messages & Signal Words:

⚠ DANGER

Indicates an immediate hazardous situation which, if not avoided, will result in death or serious injury to the operator or to bystanders.

⚠ WARNING

Indicates a potentially hazardous situation which, if not avoided, could result in death or serious injury to the operator or to bystanders.

⚠ CAUTION

Indicates a potentially hazardous situation which, if not avoided, may result in moderate or minor injury to the operator or to bystanders.

NOTICE

Indicates a situation which, if not avoided, may result in damage to product components or other property.

⚠ DANGER

RISK OF CUTTING

Moving parts can cause severe trauma.

Keep hands and feet away from rotating parts, tie up long hair, remove jewelry, and DO NOT wear loose clothing.

⚠ DANGER

SHOCK

There is a danger of electric shock.

Use only undamaged electrical cords.

DO NOT touch bare wires or receptacles.

DO NOT operate air compressor in wet weather or in wet conditions.

DO NOT touch air compressor or cords if hands or feet are wet.

Ensure that all cords are free of damage before connecting to the power supply.

Ensure that you have a sufficient electrical supply for supporting the requirements of the motor.

Improper installation of the grounding plug is able to result in a risk of electric shock. When repair or replacement of the cord or plug is required, do not connect the grounding wire to either flat terminal. The wire with insulation having an outer surface that is green with or without yellow stripes is the grounding wire.

This product must be grounded. In the event of an electrical short circuit, grounding reduces the risk of electrical shock by providing an escape wire for the electric current.

This product is equipped with a cord having a grounding wire with an appropriate grounding plug. The plug must be plugged into an outlet that is properly installed and grounded in accordance with the local codes and ordinances.

This product is for use on a nominal 120-V circuit and has a grounding plug similar to the plug illustrated in sketch A. Only connect the product to an outlet having the same configuration as the plug.

Do not use an adapter with this product.

⚠WARNING

RISK TO BREATHING

Dust or dust-like particulates caused by power-sanding, sawing, grinding, drilling or any other construction-like activities can contain contaminants that are harmful to breathe.

Always use your air compressor in a well-ventilated and clean area.

Never breathe the air that comes directly out of the air compressor or air hose. This air is not suitable for breathing.

Always wear approved safety equipment. When performing dust-creating activities, securely wear properly-fit face masks or respirators.

If you feel ill from breathing while operating your air compressor, stop and seek medical attention immediately.

⚠WARNING

HOT SURFACE

FIRE

Air compressor surfaces become hot during operation.

DO NOT touch hot surfaces, because they can cause severe burns.

Do not touch the air compressor's cylinder head. During operation, the cooling fins of the cylinder head and delivery pipe become hot.

Allow the air compressor to cool before touching it.

DO NOT place a storage cover on the unit during operation. Only place a cover on the air compressor after it has thoroughly cooled down.

⚠WARNING

FLYING OBJECTS

Flying objects can cause injury to the eyes, head and other parts of the body.

Air-powered equipment and power tools are capable of propelling items (metal chips, fasteners and particulates) at high speed into the air and could result in injury.

Always wear approved head and eye protection.

Never point the air stream at any part of your body, or at another person or animal.

When operating the air compressor, make sure all other people and animals maintain a safe distance.

Do not move the air compressor when the air tank is under pressure.

Never use the air hoses to pull or move the air compressor.

Keep the air compressor on a flat surface.

⚠WARNING

EXPLOSION

Exercise caution when using pressurized air.

To prevent injury and for your general safety, only use high-pressure hoses, fittings and couplings designed for use with air compressors.

Inspect all hoses, fittings and couplings for leaks and wear. When leaks and wear are detected, stop use and replace those items immediately. Do not repair.

Never leave pressurized air in the air tank when performing maintenance.

Never leave the air compressor unattended with the power supply in use and the air hose connected.

⚠WARNING

EXPLOSION

Improper care could lead to the air tank bursting or exploding.

Drain air tank daily or after each use to prevent moisture buildup in the air tank.

Rust can weaken the air tank and cause leaks or bursting. If rust is detected, replace tank immediately. Do not try to repair the air tank by welding, drilling or modifying it in any other way. These modifications can weaken the air tank and cause a hazardous condition.

If air tank develops a leak, replace the air tank immediately. Never repair, weld or make modifications to the air tank or its attachments.

Never make adjustments to the factory-set pressures.

Never exceed manufacturer's maximum-allowable pressure rating attachments.

Because of extreme heat, do not use plastic pipe or lead tin solder joints for a discharge line.

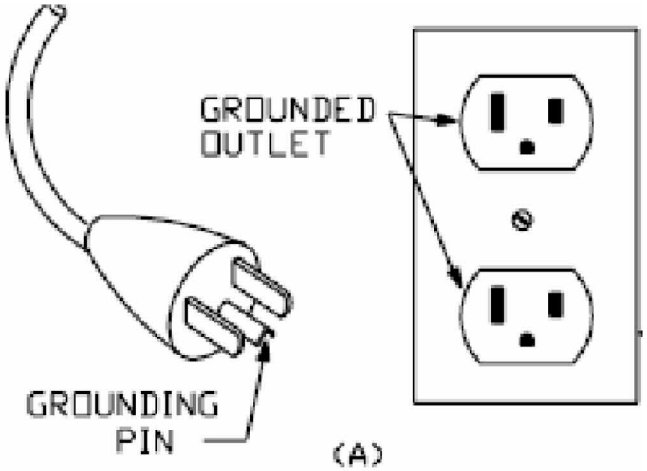

Check with a quaiified electrician or serviceman when the grounding instructions are not completely understood, or when in doubt as to whether the product is properly grounded.

Do not modify the plug provided. If it does not fit the outlet, have the proper outlet installed by a qualified electrician.

⚠WARNING

EXPLOSION

FIRE

Use caution to minimize risk of fire or explosion.

It is normal for the air compressor motor and pressure switch to produce sparks while operating. If sparks come in contact with vapors from gasoline or solvents, they may ignite and cause a fire or explosion.

Abrasive tools such as grinders, drills and other tools are capable of making sparks that can ignite flammable materials.

Always operate the air compressor a safe distance away from flammable items. Use in well-ventilated areas.

Never exceed the maximum rated pressure.

⚠CAUTION

Use caution when using extension cords.

Use an extension cord which is no more than 25' (7.6 m) long and at least 14 gauge.

Using an excessively long or thin-wired extension cord will cause severe damage to the motor.

Use only a 3-wire extension cord that has a 3-blade grounding plug.

As undersized cord results in a drop in the line voltage and loss of power and overheating.

When in doubt, use a heavier gauge. The smaller the gauge the more current the cord can carry.

⚠CAUTION

THIS EQUIPMENT INCORPORATES PARTS, SUCH AS SNAP SWITCHES, RECEPTACLES AND THE LIKE THAT TEND TO PRODUCE ARCS OR SPARKS, THERE, WHEN LOCATED IN A GARAGE, IT SHOULD BE IN A ROOM OR ENCLOSURE PROVIDED FOR THE PURPOSE, OR SHOULD BE 18 IN (45.7 CM) OR MORE ABOVE THE FLOOR.

LOCATIONS OF IMPORTANT LABELS

Read these important labels before operating.

These labels provide important safety and maintenance information. These labels should be considered as permanent parts of the air compressor. Should any of these labels become illegible, damaged or removed, please contact California Air Tools Customer Service department at 1-866-409-4581 for replacements.

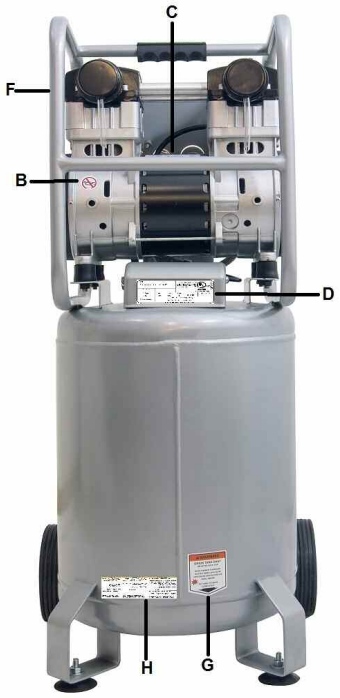

PRODUCT LABEL

A

B

C

D

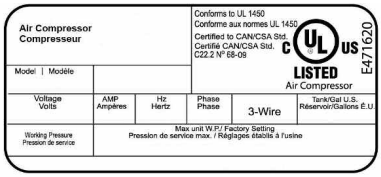

E

F

G

H

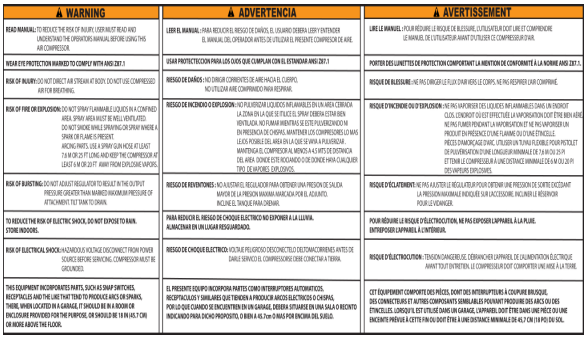

WARNING	ADVERTENCIA	AVERTISSEMENT
READ MANUAL: TO REDUCE THE RISK OF INJURY, USER MUST READ AND UNDERSTAND THE OPERATORS MANUAL BEFORE USING THIS AIR COMPRESSOR.	**LEER EL MANUAL:** PARA REDUCIR EL RIESGO DE DAÑOS, EL USUARIO DEBERA LEER Y ENTENDER EL MANUAL DEL OPERADOR ANTES DE UTILIZAR EL PRESENTE COMPRESOR DE AIRE.	**LIRE LE MANUEL :** POUR RÉDUIRE LE RISQUE DE BLESSURE, L'UTILISATEUR DOIT LIRE ET COMPRENDRE LE MANUEL DE L'UTILISATEUR AVANT D'UTILISER CE COMPRESSEUR D'AIR.
WEAR EYE PROTECTION MARKED TO COMPLY WITH ANSI Z87.1	**USAR PROTECTECION PARA LOS OJOS QUE CUMPLAN CON EL ESTANDAR ANSI Z87.1**	**PORTER DES LUNETTES DE PROTECTION COMPORTANT LA MENTION DE CONFORMITÉ À LA NORME ANSI Z87.1.**
RISK OF INJURY: DO NOT DIRECT AIR STREAM AT BODY. DO NOT USE COMPRESSED AIR FOR BREATHING.	**RIESGO DE DAÑOS:** NO DIRIGIR CORRIENTES DE AIRE HACIA EL CUERPO. NO UTILIZAR AIRE COMPRIMIDO PARA RESPIRAR.	**RISQUE DE BLESSURE :** NE PAS DIRIGER LE FLUX D'AIR VERS LE CORPS. NE PAS RESPIRER L'AIR COMPRIMÉ.
RISK OF FIRE OR EXPLOSION: DO NOT SPRAY FLAMMABLE LIQUIDS IN A CONFINED AREA. SPRAY AREA MUST BE WELL VENTILATED. DO NOT SMOKE WHILE SPRAYING OR SPRAY WHERE A SPARK OR FLAME IS PRESENT. ARCING PARTS. USE A SPRAY GUN HOSE AT LEAST 7.6 M (25.0 FT) LONG AND KEEP THE COMPRESSOR AT LEAST 6 M (20 FT) AWAY FROM EXPLOSIVE VAPORS.	**RIESGO DE INCENDIO O EXPLOSION:** NO PULVERIZAR LIQUIDOS INFLAMABLES EN UN AREA CERRADA. LA ZONA EN LA QUE SE TILICE EL SPRAY DEBERA ESTAR BIEN VENTILADA. NO FUMAR MIENTRAS SE ESTE PULVERIZANDO O EN PRESENCIA DE CHISPAS. MANTENER LOS COMPRESORES LO MAS LEJOS POSIBLE DEL AREA EN LA QUE SE VAYA A PULVERIZAR. MANTENGA EL COMPRESOR AL MENOS A 6 METROS DESTINCIA DEL AREA DONDE ESTE ROCIADO O DE DONDE HAYA CUALQUIER TIPO DE MATORES EXPLOSIVOS.	**RISQUE D'INCENDIE OU D'EXPLOSION :** NE PAS VAPORISER DES LIQUIDES INFLAMMABLES DANS UN ENDROIT CLOS. LENDROIT OÙ EST EFFECTUÉE LA VAPORISATION DOIT ÊTRE BIEN AÉRÉ. NE PAS FUMER PENDANT LA VAPORISATION ET NE PAS VAPORISER UN PRODUIT EN PRÉSENCE D'UNE FLAMME OU D'UNE ÉTINCELLE. PIÈCES D'ARCAGE CAPABLE. UTILISER UN TUYAU FLEXIBLE POUR PISTOLET DE PULVÉRISATION D'UNE LONGUEUR MINIMALE DE 7,6 M (25,0 PI) ET ÉTOIGNER LE COMPRESSEUR À UNE DISTANCE MINIMALE DE 6 M (20 PI) DES VAPEURS EXPLOSIVES.
RISK OF BURSTING: DO NOT ADJUST REGULATOR TO RESULT IN THE OUTPUT PRESSURE GREATER THAN MARKED MAXIMUM PRESSURE OF ATTACHMENT TILT TANK TO DRAIN.	**RIESGO DE REVENTONES:** NO AJUSTAR EL REGULADOR PARA OBTENER UNA PRESIÓN DE SALIDA MAYOR DE LA PRESIÓN MÁXIMA ANUNCIADA POR EL ADJUNTO. INCLINE EL TANQUE PARA DRENAR.	**RISQUE D'ÉCLATEMENT :** NE PAS AJUSTER LE RÉGULATEUR POUR OBTENIR UNE PRESSION DE SORTIE DÉCEDANT LA PRESSION MAXIMALE INDIQUÉE SUR L'ACCESSOIRE. INCLINER LE RÉSERVOIR POUR LE VIDANGER.
TO REDUCE THE RISK OF ELECTRIC SHOCK, DO NOT EXPOSE TO RAIN. STORE INDOORS.	**PARA REDUCIR EL RIESGO DE CHOQUE ELECTRICO NO EXPONER A LA LLUVIA. ALMACENAR EN UN LUGAR RESGUARDADO.**	**POUR RÉDUIRE LE RISQUE D'ÉLECTROCUTION, NE PAS EXPOSER L'APPAREIL À LA PLUIE. ENTREPOSER L'APPAREIL À L'INTÉRIEUR.**
RISK OF ELECTRICAL SHOCK: HAZARDOUS VOLTAGE DISCONNECT FROM POWER SOURCE BEFORE SERVICING. COMPRESSOR MUST BE GROUNDED.	**RIESGO DE CHOQUE ELECTRICO:** ADVERTE PELIGROSO DESCONECTELO DE LA CORRIENTE ANTES DE DARLE SERVICIO EL COMPRESSORE DEBE CONECTAR A TIERRA.	**RISQUE D'ÉLECTROCUTION :** TENSION DANGEREUSE. DÉBRANCHER L'APPAREIL DE L'ALIMENTATION ÉLECTRIQUE AVANT TOUT ENTRETIEN. LE COMPRESSEUR DOIT COMPORTER UNE MISE À LA TERRE.
THIS EQUIPMENT INCORPORATES PARTS, SUCH AS SNAP SWITCHES, RECEPTACLES AND THE LIKE THAT TEND TO PRODUCE ARCS OR SPARKS. THERE, WHEN LOCATED IN A GARAGE, IT SHOULD BE IN A ROOM OR ENCLOSURE PROVIDED FOR THE PURPOSE, OR SHOULD BE 18 IN (45.7 CM) OR MORE ABOVE THE FLOOR.	**EL PRESENTE EQUIPO INCORPORA PARTES COMO INTERRUPTORES AUTOMATICOS, RECEPTÁCULOS Y SIMILARES QUE TIENDEN A PRODUCIR ARCOS ELECTRICOS O CHISPAS. POR LO QUE CUANDO SE ENCUENTREN EN UN GARAGE, DEBERÁ SITUARSE EN UNA SALA O RECINTO INDICADOS PARA DICHO PROPOSITO, O BIEN A 45,7 cm (18 PULG) POR ENCIMA DEL SUELO.**	**CET ÉQUIPEMENT COMPORTE DES PIÈCES, DONT DES ANTIDIPUTTEURS À COUPURE BRUSQUE, DES CONNECTEURS ET AUTRES COMPOSANTS SEMBLABLES POUVANT PRODUIRE DES ARCS OU DES ÉTINCELLES. LORSQU'IL EST UTILISÉ DANS UN GARAGE, L'APPAREIL DOIT ÊTRE DANS UNE PIÈCE OU UNE ENCEINTE PRÉVUE À CETTE FIN OU DOIT ÊTRE À UNE DISTANCE MINIMALE DE 45,7 CM (18 PO) DU SOL.**

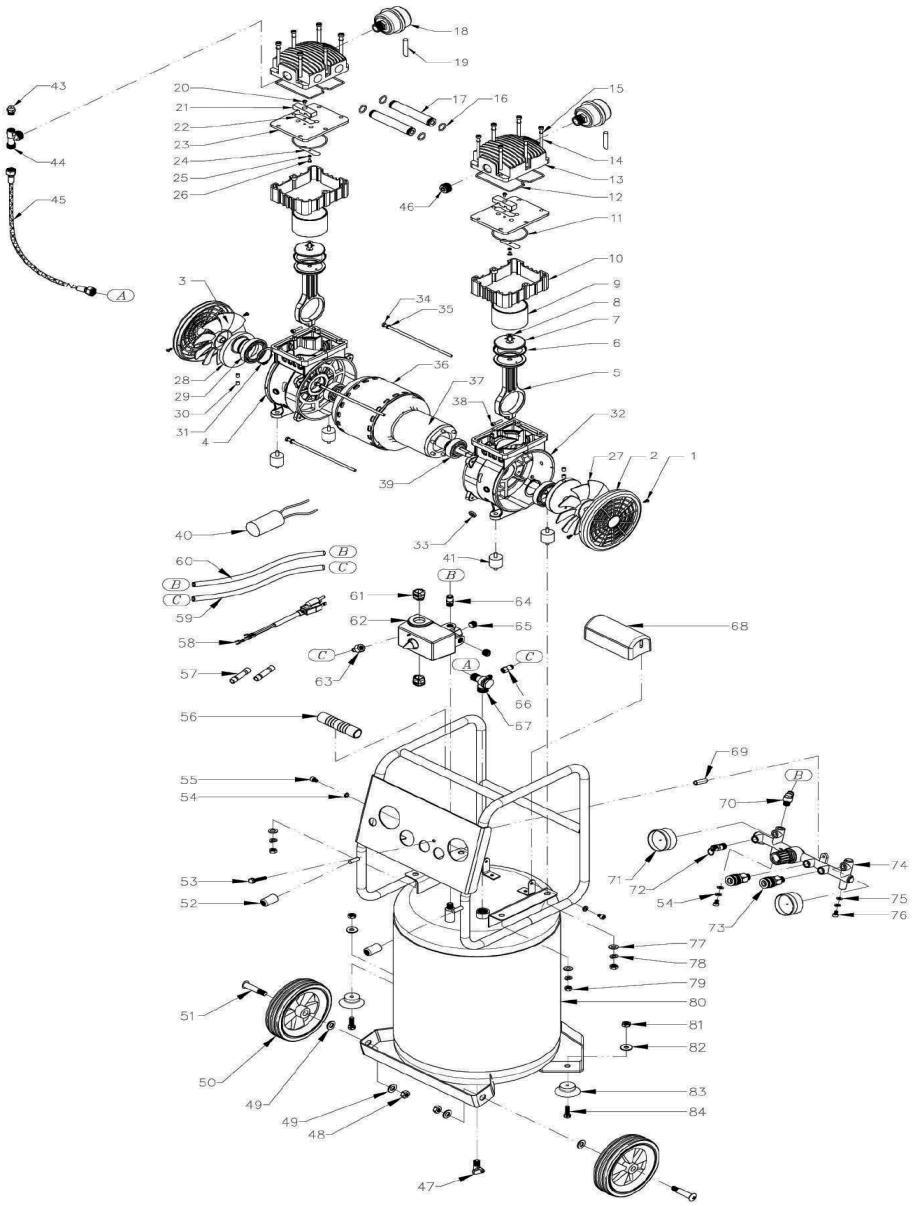

NO.	Part	NO.	Part	NO.	Part	NO.	Part	NO.	Part
1	Fan Screw	21	Limited Block	41	Shock Strut	61	Strain Relief	81	Nut
2	Fan Cover	22	Gassing Valve Plate	42	N/A	62	Pressure Switch	82	Washer
3	Left Fan	23	Valve Plate	43	Easy Start Valve	63	Hose Connector	83	Cushion Foot
4	Left Crank Case	24	Air Inflow Valve Plate	44	Elbow	64	Uploading Pipe Connector	84	Bolt
5	Connecting Rod	25	Metal Strengthen Sheet	45	Exhaust Hose	65	Pressure Switch Plug	85	
6	Piston Ring	26	Screw	46	Motor Head Plug	66	Hose Connector	86	
7	Pressure Plate	27	Right Fan	47	Drain Ball Valve	67	Check Valve	87	
8	Pressure Plate Screw	28	Crank	48	Nut	68	Capacitor Cover	88	
9	Cylinder	29	Bearing	49	Washer	69	Panel Support	89	
10	Adjustment Stent	30	Cheese Head Screw	50	Wheel	70	Elbow	90	
11	Cylinder Obturating Ring	31	Clip	51	Wheel Bolt	71	Pressure Gauge	91	
12	Cylinder Head Obturating Ring	32	Right Crank Case	52	Rubber Panel Guards	72	Safety Valve	92	
13	Cylinder Head	33	Leading-out Line Guard Circle	53	Bolt	73	1/4" Quick Connector	93	
14	Cylinder Head Screw	34	Bolt	54	Washer	74	Manifold	94	
15	Spring Washer	35	Washer	55	Screw	75	Washer	95	
16	Connecting Hose Oburating Ring	36	Stator	56	Handle	76	Screw	96	
17	Connecting Hose	37	Rotor	57	Wire Connectors	77	Washer	97	
18	Air Filter	38	Connecting Rod Screw	58	Power Cord with Plug	78	Washer	98	
19	Air Filter Hose	39	Bearing	59	Uploading Pipe	79	Nut	99	
20	Screw	40	Capacitor	60	Connecting Pipe	80	10 Gallon Air Tank	100	

PRE-OPERATION CHECKLIST

Package Contents & Assembly

Model: 10020C

Package contents:

Air Compressor
Owner's Manual
(2) Air Filters
Wheel Assembly Kit
2 - #51 Wheel Bolt
4 - #49 Washer
2 - #50 Wheel
2 - #48 Nut
2 - #84 Bolt
2 - #83 Cushion Foot
2 - #82 Washer
2 - #81 Nut

Install the Wheel Kit

1. Slide Bolt #51 through Wheel #50.
2. Slide the washer #49 onto Bolt #51
3. Slide the bolt #51 through the wheel support hole located on the front bottom of the air compressor tank.
4. Attached the Washer #49 and Nut #48 to the Bolt #51and tighten firmly.
5. Repeat steps 1-4 to assemble the other wheel.

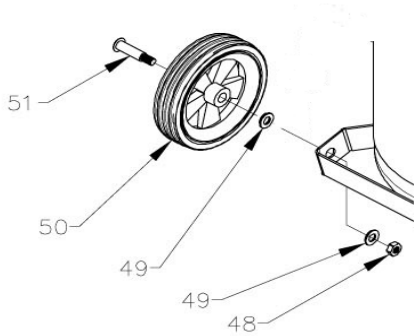

Assembly:

Install the Air Filter

1. Attach the air filters to the top back side of motor head. (looking from the front to the back of the air compressor) Screw the air filters into the motor head ports

6. Slide Bolt #84 through Cushion Foot #83.
7. Slide Bolt #84 through Cushion Foot support hole located on the back bottom of the air compressor.. Attach Washer #82 and Nut #81 to Bolt # 84 firmly tighten.
8. Repeat these steps on the other support.

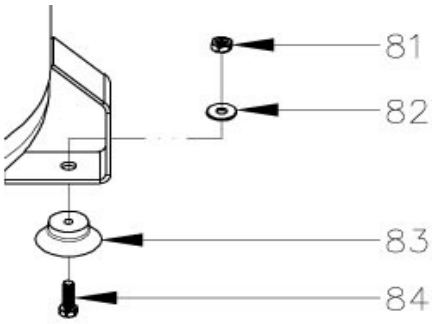

Inspect for Damage

Before using the air compressor, make sure the air tank is not damaged, inspect all parts for damage, and check that all pipes are firmly connected.

Do not use the air compressor if any damage is found. If damaged, have an authorized service center inspect and test the air compressor to ensure that is working properly.

Save Packaging

IMPORTANT: Save all outside packaging in case you ever need to return the product for service or repair.

Compressor Location

Use on Flat Surface

For proper operation, the air compressor must be placed on a flat surface with an incline no greater than 15 degrees.

⚠WARNING

EXPLOSION

FIRE

Use caution to minimize risk of fire or explosion.

It is normal for the air compressor motor and pressure switch to produce sparks while operating. If sparks come in contact with vapors from gasoline or solvents, they may ignite and cause a fire or explosion.

Abrasive tools such as grinders, drills and other tools are capable of making sparks that can ignite flammable materials.

Always operate the air compressor a safe distance away from flammable items. Use in well-ventilated areas.

Never exceed the maximum rated pressure.

Maintain a Clear Area

It is very important that the air compressor is positioned so that there is adequate airflow around the machine. There must be at least 2 feet of obstacle-free space surrounding and above the air compressor.

⚠WARNING

RISK TO BREATHING

Dust or dust-like particulates caused by power-sanding, sawing, grinding, drilling or any other construction-like activities can contain contaminants that are harmful to breathe.

Always use your air compressor in a well-ventilated and clean area.

Never breathe the air that comes directly out of the air compressor or air hose. This air is not suitable for breathing.

Always wear approved safety equipment. When performing dust-creating activities, securely wear properly-fit face masks or respirators.

If you feel ill from breathing while operating your air compressor, stop and seek medical attention immediately.

Use in Areas with Clean Air

For proper operation and to maximize the longevity of the air compressor, it is very important that the air drawn into the air compressor is clean.

The air compressor should not be used in areas where dust or particulates are in the air.

This will damage the motor and impair proper operation.

IMPORTANT: Always use the air filter, properly installed.

Electrical Power

Electrical Power Requirements

⚠DANGER

SHOCK

There is a danger of electric shock.

Use only undamaged electrical cords.

DO NOT touch bare wires or receptacles.

DO NOT operate air compressor in wet weather or in wet conditions.

DO NOT touch air compressor or cords if hands or feet are wet.

Ensure that all cords are free of damage before connecting to the power supply.

Ensure that you have a sufficient electrical supply for supporting the requirements of the motor.

Improper installation of the grounding plug is able to result in a risk of electric shock. When repair or replacement of the cord or plug is required, do not connect the grounding wire to either flat terminal. The wire with insulation having an outer surface that is green with or without yellow stripes is the grounding wire.

This product must be grounded. In the event of an electrical short circuit, grounding reduces the risk of electrical shock by providing an escape wire for the electric current.

This product is equipped with a cord having a grounding wire with an appropriate grounding plug. The plug must be plugged into an outlet that is properly installed and grounded in accordance with the local codes and ordinances.

This product is for use on a nominal 120-V circuit and has a grounding plug similar to the plug illustrated in sketch A. Only connect the product to an outlet having the same configuration as the plug.

Do not use an adapter with this product.

Before using the air compressor, refer to the serial label for voltage and amperage requirements. Make sure you have a sufficient electrical supply for supporting the motor's requirements.

Use a dedicated circuit for the best results.

Low voltage and/or an overload circuit can cause the motor's overload protection system circuit breaker to trip.

Electrical Extension Cords

⚠CAUTION

Use caution when using extension cords.

Use an extension cord which is no more than 25' (7.6 m) long and at least 14 gauge.

Using an excessively long or thin-wired extension cord will cause severe damage to the motor.

Use only a 3-wire extension cord that has a 3-blade grounding plug.

As undersized cord results in a drop in the line voltage and loss of power and overheating.

When in doubt, use a heavier gauge. The smaller the gauge the more current the cord can carry.

Inspect all electrical extension cords to ensure that they are free of damage.

When using an extension cord, use a heavy-duty cord that is no more than 25 feet long and at least 14 gauge.Use only a 3-wire extension cord that has a 3-blade grounding plug.

OPERATING THE AIR COMPRESSOR

⚠WARNING

This manual contains important instructions for operating this product. For your safety, and the safety of others, be sure to read this manual thoroughly before operating the product.

Failure to properly follow all the instructions and precautions can cause you and others to be seriously hurt or killed.

Save this manual for future reference.

Introduction

This air compressor features a compact structure, stable performance, a high airflow rate, easy operation and maintenance. Because the air compressor produces no oil in the airflow, it can be used as an independent air supply machine for situations in which oil in the airflow is an issue. The motor directly drives the pistons and is able to function without lubrication for a long period of time.

Assembly

1. Connect your air supply hose to a 1/4" male universal or industrial quick connect coupler. Connect the male quick connect coupler to the female quick connect coupler located on the air compressor
2. Make sure the drainage valve is off and that the pressure switch is in the OFF position.
3. Ensure that the power supply you are going to use is operating normally.
4. Insert the power supply cord into the power supply socket.

Test Run

Before using the air compressor for the first time.
Complete a test run as follows:

1. Turn the power switch to the OFF position.
   Plug the power supply cord into a power supply socket.
   Start the air compressor by turning the power switch to the ON position.
   The pressure gauge reading will slowly rise as pressure increases inside the air tank.
   When the gauge reading reaches 120 PSI - 125 PSI, the pressure switch will automatically turn the power off.
   This indicates the compressor is working normally.
2. Turn the power switch to the Off position, unplug the power supply cord and release the air in the tank by pulling on the safety valve. At this point proceed to the next step (daily operations).

   Note: If the Air Compressor is not working properly, the pressure gauge will indicate that there is a decrease in pressure in the air tank. If there is an air leak from the compressor the pressure in the air tank decreases, the pressure switch resets and the motor automatically turns back on.

   If you detect an air leakage, turn the power switch to the Off position, release the air from the tank by pulling on the safety valve. Unplug the power supply cord and contact Customer Support for Assistance.

⚠WARNING

HOT SURFACE

FIRE

Air compressor surfaces become hot during operation.

DO NOT touch hot surfaces, because they can cause severe burns.

Do not touch the air compressor's cylinder head. During operation, the cooling fins of the cylinder head and delivery pipe become hot.

Allow the air compressor to cool before touching it.

DO NOT place a storage cover on the unit during operation. Only place a cover on the air compressor after it has thoroughly cooled down.

⚠WARNING

FLYING OBJECTS

Flying objects can cause injury to the eyes, head and other parts of the body.

Air-powered equipment and power tools are capable of propelling items (metal chips, fasteners and particulates) at high speed into the air and could result in injury.

Always wear approved head and eye protection.

Never point the air stream at any part of your body, or at another person or animal.

When operating the air compressor, make sure all other people and animals maintain a safe distance.

Do not move the air compressor when the air tank is under pressure.

Never use the air hoses to pull or move the air compressor.

Keep the air compressor on a flat surface.

Daily Operation

Starting the compressor:

1. Turn the power switch to the OFF position.
2. Attach the air hose to the 1/4" quick connect coupler
3. Close the drain valve.
4. Have air filters attached
5. Plug the power supply cord into a power supply socket.
6. Turn the power switch to the ON position.
7. Let the motor run and tank fill until motor turns off.
8. To regulate the air flow.

   While the air compressor is running, turn "On" your tool and turn the regulator knob to the right increasing the pressure.

   Turn the pressure up until the desired pressure is reached.
9. Operate air tool normally.

Shutting down the compressor:

1. Turn the power switch to the OFF position.
2. Unplug the power supply cord.
3. Reduce the pressure in the air tank through the air supply hose.

MAINTENANCE

Draining the Air Tank

The frequency at which you should drain the air tank depends on the environmental conditions and the amount of operating time logged. The average draining frequency is every 2 to 3 days.

1. Place the air compressor above a container capable of holding water.
2. With compressed air in the air tank, slowly turn the drain valve knob to the forward (open) or straight position.
   The water in the air tank will drain out.
3. After all of the accumulated water has drained out, turn the drain valve knob to the closed or left position in order to avoid leakage.
4. Draining the air tank protects parts from rust and corrosion.

Cleaning or Changing the Air Filter

The air filter is designed to reduce noise and help prevent particulates in the air from entering and damaging the air compressor.

After being used for a period of time, the air filter will become clogged. This will reduce the air intake capabilities of the air compressor, reducing performance. Therefore, the air filter must be cleaned or replaced regularly.

1. Open the lid on the air filter, then remove the air filter element.
2. To clean the element blow off or brush off the dirt and dust.
3. If clogged, replace with a new air filter.

Testing for Leaks

Make sure all connections are tight. Do not overtighten.

A small leak in any hose or pipe connection will reduce the air compressor's performance.

To test for small leaks, spray a small amount of soapy water on the area suspected of leaking. If the soap bubbles, replace the broken part.

Cleaning

Clean items with a soft brush, or wipe with a moistened cloth using a biodegradable solvent.

Do not use flammable liquids such as gasoline or alcohol. Always keep parts clean from dirt and dust for better performance.

Pressure Switch

The pressure switch is factory pre-set to shut off at between

120 - 125 PSI and to re-start at between 90-95 PSI

STORAGE

Before storing for a prolonged period of time:

1. Turn off the power supply.
2. Disconnect the power cord from the power supply and wrap the power cord around the air compressor handle to reduce the risk of damage.
3. Pull the relief valve and release all the pressure from the air tank.
4. Clean the air compressor to remove all dirt and dust.
5. Cover the air compressor with a cover to protect the unit from dust and moisture.
6. Do not stack or store any items on top of or around the air compressor. Damage could occur.

⚠CAUTION

TO REDUCE THE RISK OF ELECTRIC SHOCK, DO NOT EXPOSE TO RAIN.

STORE INDOORS.

TROUBLESHOOTING

PROBLEM	POSSIBLE CAUSE	POSSIBLE SOLUTIONS
Pressure drop in the tank.	Air leaks at connections.	Let the compressor build pressure in the tank, to the maximum pressure if possible. Brush soapy water on air connections and look carefully for air bubbles. Tighten leaky connections. If the problem persists, contact the seller for further advice.
The unloader valve leaks when the compressor is idle.	Unloader valve seal is defective.	Let the air in the air tank flow out until all the pressure is released. Then remove the unloader valve plug and clean the valve seal. If necessary, replace the seal and then reinstall all components.
The compressor stopped and does not start.	The thermal protector turned on because the motor is overheating.	Check that the main voltage corresponds to the air compressor specifications. An extension cord that is too thin or too long can cause a voltage drop and cause the motor to overheat. Excessive use (over 1 hour continuous use) can cause the motor to overheat Allow the motor to cool down.
	Motor windings are burned out.	Contact Customer Support.
The motor does not start and makes a humming noise.	Capacitor is burned out.	Contact Customer Support
The motor does not start or starts slowly.	Low voltage supply to the motor.	Check that the main voltage corresponds to the air compressor specifications. An extension cord that is too thin or too long can cause a voltage drop.. Use heavy duty extension cords. Ensure that the air compressor is plugged into a fully functional power outlet
The compressor is noisy with metallic clangs.	Compressor head gasket or reed valve is damaged	Stop the compressor and contact the dealer.
The compressor does not reach the maximum pressure.	Compressor head gasket or reed valve is faulty.	Stop the compressor and contact the dealer.
The compressor doesn't seem to provide as much air as it did when new and/or the compressor cuts off within a much shorter time period.	The pressure switch needs adjusting.	Stop the compressor and contact the dealer.
	The tank is full of water due to condensation.	Open the drain valve and release the water from the tank.
The motor pump unit does not stop when the tank pressure reaches its maximum working pressure (75 PSI).	Pressure switch defective or needs adjusting.	Stop the compressor immediately and contact Customer Support.

SPECIFICATIONS

Electrical Circuit

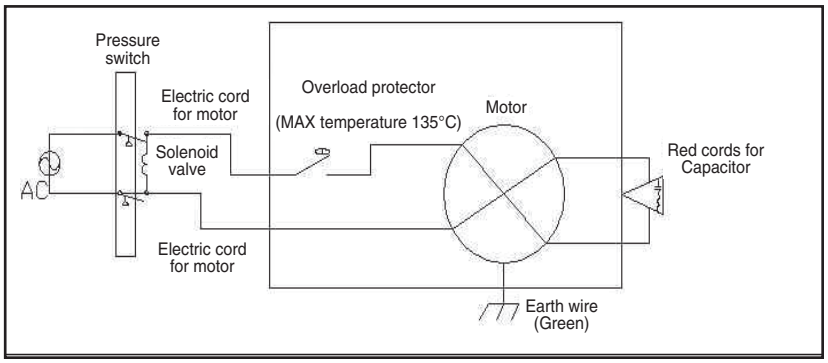

Air Passage Drawing

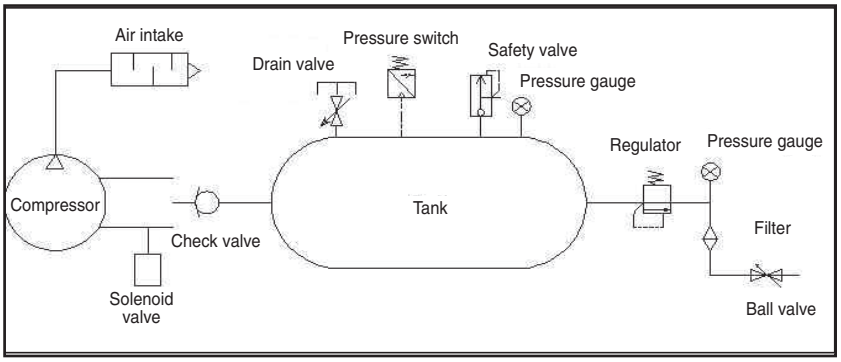

CALIFORNIA AIR TOOLS INC. LIMITED WARRANTY

This warranty is limited to Air Compressors distributed by:

California Air Tools, Inc.
8560 Siempre Viva Road, Unit 3
San Diego, CA 92154

Limited Warranty

California Air Tools Inc. will repair or replace, free of charge, to the original retail customer who purchased a California Air Tools, Inc. Air Compressor from an authorized dealer, distributor or distributor's dealer in North America.

This warranty does not transfer to subsequent owners.

California Air Tools Inc. will repair or replace, at its option, any parts of the portable air compressor that are proven by an authorized service center to be defective in material or workmanship under normal use during the applicable warranty time period as stated below. This limited warranty covers the cost of the replacement parts and labor for all defects when installed by an authorized service center. Transportation charges are the responsibility of the customer. Any part replaced under warranty becomes the property of California Air Tools Inc.

All parts replaced under warranty will be considered as part of original product, and any warranty on those parts will expire coincident with the original product warranty.

Limited Warranty Periods

Non-commercial / Non-rental (personal use by a retail customer):	1 year parts and labor
Commercial / Rental (usage for income, business use):	1 year parts and labor

The limited warranty period begins on the date of retail purchase by the original purchaser.

Disclaimers, Limitations of Remedies & Exclusions

This warranty gives you specific legal rights, and you may also have other rights which may vary from state to state.

Disclaimer of Other Warranties

To the fullest extent permitted by applicable law, this limited warranty is exclusive and expressly in lieu of any and all other warranties, including, without limitation, any implied warranties of merchantability or fitness for a particular purpose or any other implied warranties that may arise from the course of dealing or usage of the trade. California Air Tools Inc. hereby declaims and excludes all other warranties. To the extent that California Air Tools Inc. products are consumer products under applicable federal and state law with respect to any customer, the duration of any implied warranties (including but not limited to implied warranties of merchantability or fitness for a particular purpose) are limited to the shortest duration permitted by applicable law or the Limited Warranty period provided herein, whichever is longer.

Limitations of Remedies

California Air Tools Inc. shall not be liable to customer, or anyone claiming under customer, for any other obligations or liabilities, including but not limited to, obligations or liabilities airing out of breach of contract or warranty, negligence or other tort or any theory of strict liability, with respect to the air compressor or California Air Tools Inc. acts or omissions or otherwise. To the fullest extent permitted by applicable law, California Air Tools Inc. shall not in any event be liable for incidental, compensatory, punitive, consequential, indirect, special or other damages, including but not limited to loss of use, loss of income, loss of time, loss of sales, injury to personal property, or liability customer incurs with respect to any other person, or any other type or form of consequential damage or economic loss.

Exclusions

In addition to the foregoing disclaimers, limitations and terms, this limited warranty shall not apply to and does not cover accessories, nor does it cover products that are in any way subject to any of the following:

1. Improper setup, installation or storage.
2. Lack of proper maintenance and service.
3. Accident, damage, abuse or misuse.
4. Abnormal operating conditions or applications.
5. Repair or modification by customer or any third party without written consent of California Air Tools Inc.
6. Use under operating conditions or in applications not recommended by California Air Tools Inc.
7. Normal wear.
8. The use of accessories or attachments not recommended by California Air Tools Inc.
9. Acts of God.

The application of these exclusions will be determined at the sole discretion of California Air Tools Inc.

Registration

Warranty registration with California Air Tools Inc. is required on all products.

You can mail the enclosed registration form or register on-line.

How to Videos

California Air Tools provides “HOW TO VIDEOS” on our website WWW.CALIFORNIAAIRTOOLS.COM.

The “How to Videos” provide valuable information regarding set-up, operation and maintenance.

Please visit our website and view these videos for beneficial information.

Service or Parts

Warranty is also available by keeping and showing your original receipt from the date of purchase to an Authorized California Air Tools Service Center.

For all customer service inquiries call 1-866-409-4581 or visit

WWW.CALIFORNIAAIRTOOLS.COM

Go to the “Customer Service” Tab

Click on “Service & Parts” Button for the Fastest Service.

PRODUCT REGISTRATION

To register your product, please complete the information below and mail to the mailing address at the end of this page.

1. Personal Information:

Full Name (Include Middle Initial): _____

Mailing Address: _____

City:_____ State:_____ Zip Code: _____

Phone Number: _____

E-mail Address: _____

(Check here to receive product information and offers via e-mail)

(Check here to receive product information from other companies via e-mail)

2. Product Information:

Date of Purchase: _____(MM / DD / YYYY)

Model Number:_____

Serial Number: _____ (Found on name plate)

Purchased Location:_____

Purchase Price: _____

Type of Primary Use for this Product: Home Recreation Emergency Rental Commercial

Other_____

Features Influencing Product Purchase: Brand Portability Power Rating Price Warranty

Other Features (describe) _____

What other Power Equipment are you interested in purchasing in the future? _____

Thank you for registering your product.

Mail to:
California Air Tools
8560 Siempre Viva Road, Unit 3
San Diego, CA 92154